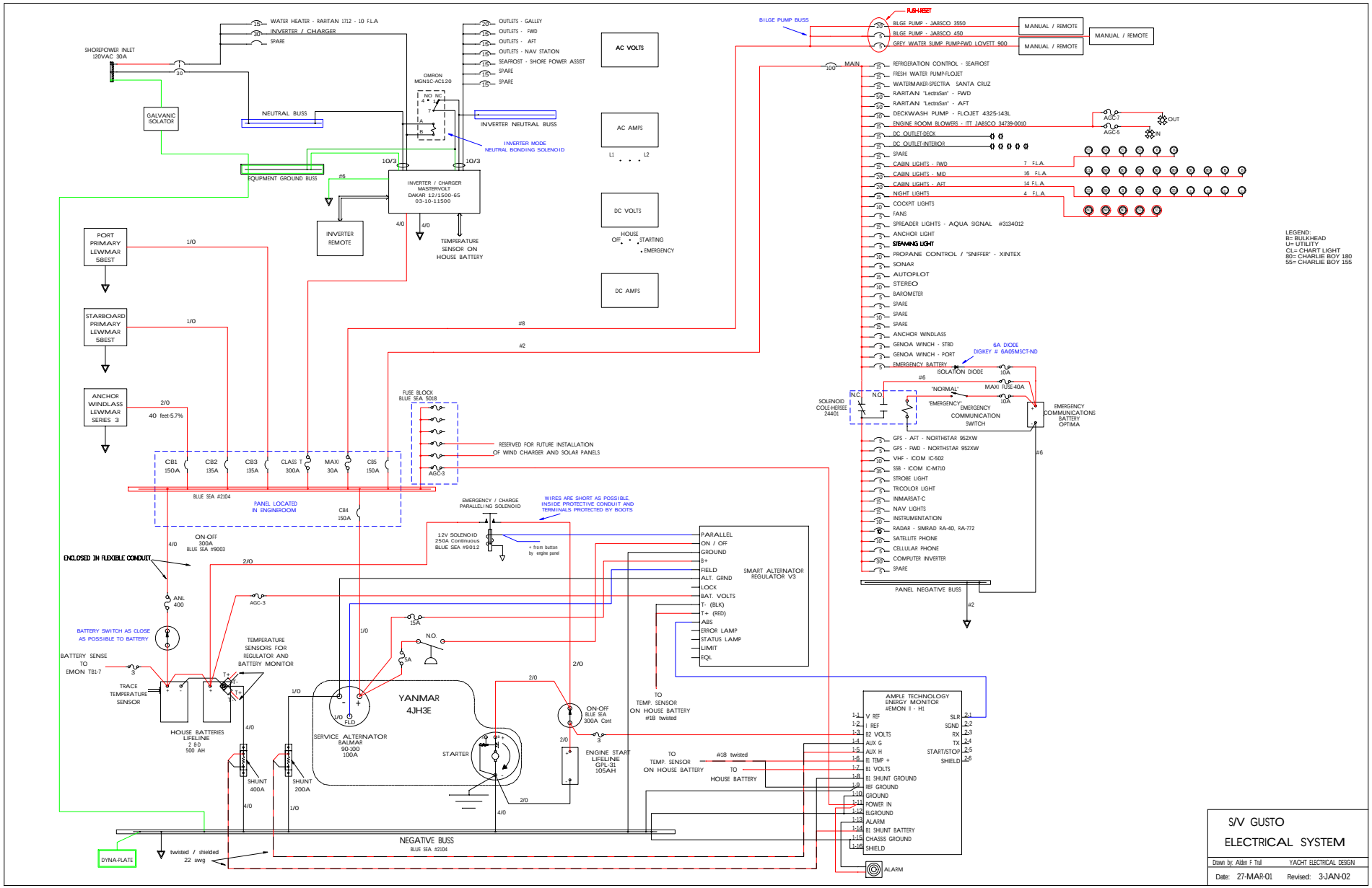
WATER HEATER - RARITAN 1712 - 10 F.L.A
INVERTER / CHARGER
SPARE
SHOREPOWER INLET 120VAC 30A
GALVANIC ISOLATOR
NEUTRAL BUSS
EQUIPMENT GROUND BUSS
OMRON MGN1C-AC120
INVERTER MODE NEUTRAL BONDING SOLENOID
INVERTER / CHARGER MASTERVOLT DAKAR 12/1500-65 03-10-11500
INVERTER REMOTE
TEMPERATURE SENSOR ON HOUSE BATTERY
OUTLETS - GALLEY
OUTLETS - FWD
OUTLETS - AFT
OUTLETS - NAV STATION
SEAFROST - SHORE POWER ASSIST
SPARE
SPARE
INVERTER NEUTRAL BUSS
AC VOLTS
AC AMPS
DC VOLTS
DC AMPS
HOUSE
OFF
STARTING
EMERGENCY
BILGE PUMP BUSS
FLASH-HERSEE
BLGE PUMP - JABSCO 3550
BLGE PUMP - JABSCO 450
GREY WATER SUMP PUMP-FWD LOVETT 900
MANUAL / REMOTE
MANUAL / REMOTE
MANUAL / REMOTE
MAIN
REFRIGERATION CONTROL - SEAROST
FRESH WATER PUMP-FLOJET
WATERMAKER-SPECTRA SANTA CRUZ
RARITAN "LectraSan" - FWD
RARITAN "LectraSan" - AFT
DECKWASH PUMP - FLOJET 4325-143L
ENGINE ROOM BLOWERS - ITT JABSCO 34739-0010
DC OUTLET-DECK
DC OUTLET-INTERIOR
SPARE
CABIN LIGHTS - FWD 7 F.L.A.
CABIN LIGHTS - MID 16 F.L.A.
CABIN LIGHTS - AFT 14 F.L.A.
NIGHT LIGHTS 4 F.L.A.
COCKPIT LIGHTS
FANS
SPREADER LIGHTS - AQUA SIGNAL #3134012
ANCHOR LIGHT
STEAMING LIGHT
PROPANE CONTROL / "SNIFFER" - XINTEX
SONAR
AUTOPILOT
STEREO
BAROMETER
SPARE
SPARE
SPARE
ANCHOR WINDLASS
GENOA WINCH - STBD
GENOA WINCH - PORT
EMERGENCY BATTERY
6A DIODE DIGKEY # 6A05MSCT-ND
ISOLATION DIODE
SOLENOID COLE-HERSEE 24401
"NORMAL"
"EMERGENCY"
EMERGENCY COMMUNICATION SWITCH
MAXI RESE-40A
EMERGENCY COMMUNICATIONS BATTERY OPTIMA
GPS - AFT - NORTHSTAR 952XW
GPS - FWD - NORTHSTAR 952XW
VHF - ICOM IC-502
SSB - ICOM IC-M710
STROBE LIGHT
TRICOLOR LIGHT
INMARSAT-C
NAV LIGHTS
INSTRUMENTATION
RADAR - SIMRAD RA-40, RA-772
SATELLITE PHONE
CELLULAR PHONE
COMPUTER INVERTER
SPARE
PANEL NEGATIVE BUSS
LEGEND:
B= BULKHEAD
U= UTILITY
CL= CHART LIGHT
80= CHARLIE BOY 180
55= CHARLIE BOY 155
PORT PRIMARY LEWMAR 58EST
STARBOARD PRIMARY LEWMAR 58EST
ANCHOR WINDLASS LEWMAR SERIES 3
40 feet-5.7%
FUSE BLOCK BLUE SEA 5018
RESERVED FOR FUTURE INSTALLATION OF WIND CHARGER AND SOLAR PANELS
CB1 150A
CB2 135A
CB3 135A
CLASS T 300A
MAXI 30A
CB5 150A
CB4 150A
BLUE SEA #2104
PANEL LOCATED IN ENGINEROOM
EMERGENCY / CHARGE PARALLELING SOLENOID
WIRES ARE SHORT AS POSSIBLE, INSIDE PROTECTIVE CONDUIT AND TERMINALS PROTECTED BY BOOTS
12V SOLENOID 250A Continuous BLUE SEA #9012
+ from button by engine panel
ON-OFF 300A BLUE SEA #9003
ENCLOSED IN FLEXIBLE CONDUIT
ANL 400
BATTERY SWITCH AS CLOSE AS POSSIBLE TO BATTERY
BATTERY SENSE TO EMON TB1-7
TRACE TEMPERATURE SENSOR
TEMPERATURE SENSORS FOR REGULATOR AND BATTERY MONITOR
HOUSE BATTERIES LIFELINE 2 8D 500 AH
SHUNT 400A
SHUNT 200A
YANMAR 4JH3E
SERVICE ALTERNATOR BALMAR 90-100 100A
STARTER
ON-OFF BLUE SEA 300A Cont
ENGINE START LIFELINE GPL-31 105AH
PARALLEL
ON / OFF
GROUND
B+
FIELD
ALT. GRND
LOCK
BAT. VOLTS
T- (BLK)
T+ (RED)
ABS
ERROR LAMP
STATUS LAMP
LIMIT
EQL
SMART ALTERNATOR REGULATOR V3
TO TEMP. SENSOR ON HOUSE BATTERY #18 twisted
TO TEMP. SENSOR ON HOUSE BATTERY
#18 twisted
TO HOUSE BATTERY
AMPLE TECHNOLOGY ENERGY MONITOR #EMON II - H1
V REF
I REF
B2 VOLTS
AUX G
AUX H
B1 TEMP +
B1 VOLTS
B1 SHUNT GROUND
REF GROUND
GROUND
POWER IN
B1GROUND
ALARM
B1 SHUNT BATTERY
CHASSS GROUND
SHIELD
SLR
SGND
RX
TX
START/STOP
SHIELD
ALARM
NEGATIVE BUSS
BLUE SEA #2104
DYNA-PLATE
twisted / shielded 22 awg
S/V GUSTO
ELECTRICAL SYSTEM
Drawn by: Aldin F Trill
YACHT ELECTRICAL DESIGN
Date: 27-MAR-01
Revised: 3-JAN-02